TRINITY GLASS INTERNATIONAL
33615 1st Way S, Federal Way, WA 98003

Digitally signed by Lyndon F Schmidt
Date: 2025.07.02 15:09:22 -04'00'

L. F. SCHMIDT LICENSE No. 43409 STATE OF FLORIDA PROFESSIONAL ENGINEER

This item has been digitally signed and sealed by **L. F. Schmidt, P.E.** on the date adjacent to the seal.

Printed copies of this document are not considered signed and sealed and the signature must be verified on any electronic copies.

THIS PRODUCT APPROVAL IS VALID ONLY FOR THE STATE OF FLORIDA

"Direct Glaze" Fiberglass Door Single w/ Sidelite(s)

INSWING/OUTSWING "IMPACT"

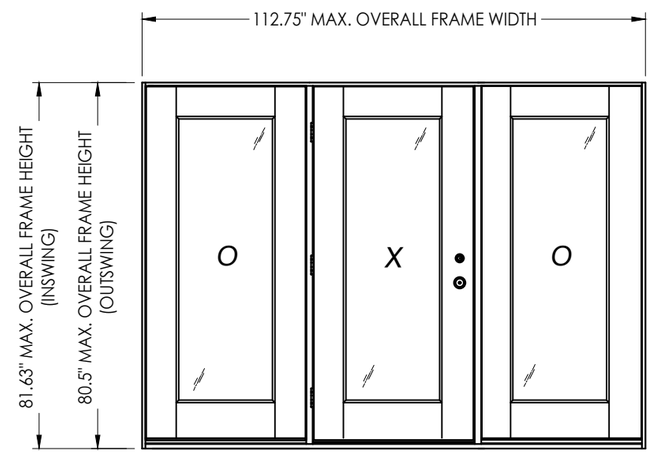

OXO

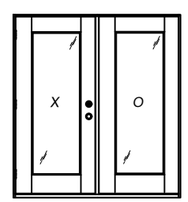

XO, OX

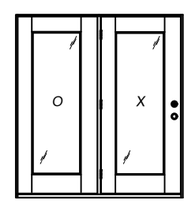

OX, XO

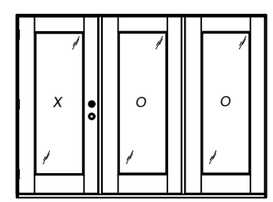

XOO, OOX

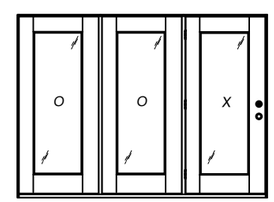

OOX, XOO

CONTINUOUS HEAD & SILL

CONFIGURATION	MAX. FRAME DIMENSION	JAMB & MULLION MATERIAL	DESIGN PRESSURE (PSF) INSWING		DESIGN PRESSURE (PSF) OUTSWING	
			POSITIVE	NEGATIVE	POSITIVE	NEGATIVE
OX, XO	74.75" x 81.63"	WOOD	+45.0	-50.0	+40.0	-40.0
OXO, XOO, OOX	111.5" x 81.63"		+45.0	-50.0	+40.0	-40.0
OX, XO	75.25" x 81.63"	PVC	+50.0	-50.0	+50.0	-50.0
OXO, XOO, OOX	112.75" x 81.63"		+50.0	-50.0	+50.0	-50.0

GENERAL NOTES

1. This product has been evaluated and is in compliance with the 8th Edition (2023) Florida Building Code (FBC) structural requirements excluding the "High Velocity Hurricane Zone" (HVHZ).
2. Product anchors shall be as listed and spaced as shown on details. Anchor embedment to base material shall be beyond wall dressing or stucco.
3. When used in areas requiring wind borne debris protection, this product complies with FBC Sections 1609.1.2 & R301.2.1.2 and does not require an impact resistant covering. This product meets missile level "D" and excludes Wind Zone 4 as defined in ASTM E 1996 and FBC Sections 1609.1.2.2 & R301.2.1.2.1.
4. For 2x stud framing construction, anchoring of these units shall be the same as that shown for 2x buck masonry construction.
5. Site conditions that deviate from the details of this drawing require further engineering analysis by a licensed engineer or registered architect.

TABLE OF CONTENTS

SHEET #	DESCRIPTION	SHEET #	
1	Typical Elevations, Design Pressures & General Notes	7	Horizontal & Vertical Cross Sections (1X Buck)
2	Door Panel Details	8	Horizontal & Vertical Cross Sections (Direct to Masonry)
3	Sidelite Panel & Flush Glazing Details	9	Vertical Cross Sections (Thresholds)
4	Elevations	10	Buck Anchoring
5	Horizontal Cross Sections	11	Frame Anchoring & Hardware Details
6	Horizontal & Vertical Cross Sections (2X Buck)	12	Bill of Materials & Components

Documents Prepared By:
Lyndon F. Schmidt
P.E. No. 43409
RW BUILDING CONSULTANTS, INC.
P.O. Box 230, Valrico, FL 33595
Phone No.: 813.659.9197
FBPE Registry No. 9813

PRODUCT: TRINITY FIBERGLASS PATIO DOOR

PART OR ASSEMBLY: TYPICAL ELEVATION, DESIGN PRESSURES & GENERAL NOTES

REVISIONS

NO.	DATE		BY
1	6/20/25	ADD GLAZING DETAIL G3	LFS

DATE: 1/30/25
SCALE: N.T.S.
DWG. BY: RW
CHK. BY: LFS
DRAWING NO.: FL-47284.7
SHEET 1 OF 12

© 2025 R.W. Building Consultants Inc.

Z:\2023 FBC Drawings\Trinity Glass Int'l\FL-47284 R1\FL-47284.7.dwg

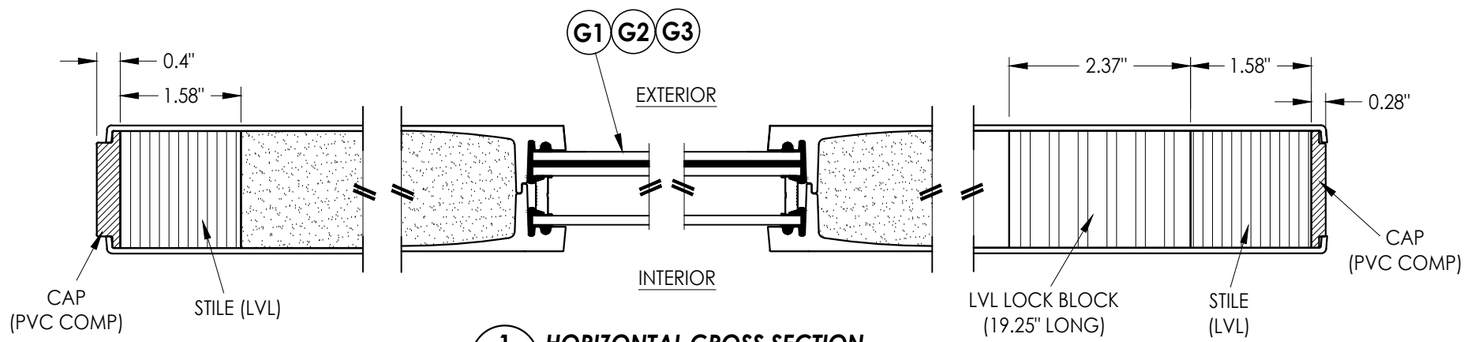

1/2 **HORIZONTAL CROSS SECTION**

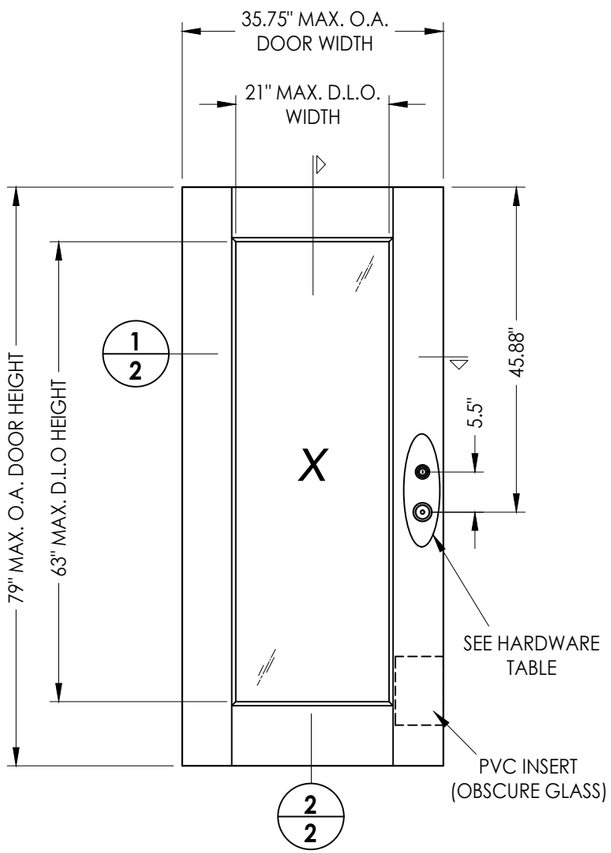

40 **FIBERGLASS DOOR PANEL**

FIBERGLASS DOOR SKIN: MIN. 0.071" THK.
FOAM CORE MATERIAL: POLYURETHANE

HARDWARE CHART		
MANUFACTURER	MODEL	
KWIKSET	KNOB:	SIGNATURE SERIES
	DEADBOLT:	SIGNATURE SERIES (980)
SCHLAGE	KNOB:	F SERIES
	DEADBOLT:	B60 SERIES

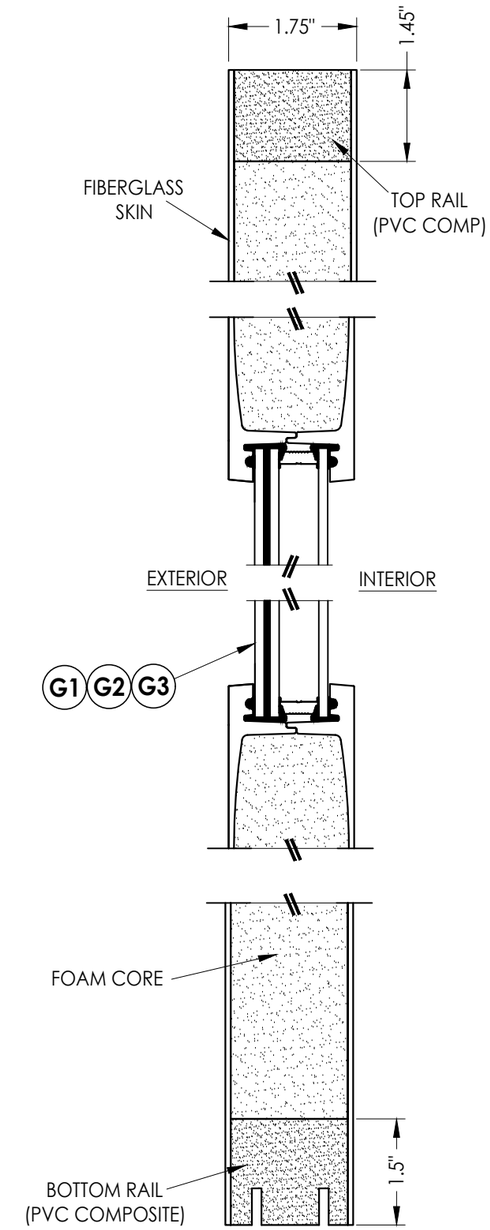

2/2 **VERTICAL CROSS SECTION**

Documents Prepared By:
Lyndon F. Schmidt
P.E. No. 43409
RW BUILDING CONSULTANTS, INC.
P.O. Box 230, Valrico, FL 33595
Phone No.: 813.659.9197
FBPE Registry No. 9813

PRODUCT: TRINITY FIBERGLASS PATIO DOOR

PART OR ASSEMBLY: DOOR PANEL DETAILS

NO.	DATE	REVISIONS	BY
1	6/20/25	ADD GLAZING DETAIL G3	LFS

DATE: 1/30/25
SCALE: N.T.S.
DWG. BY: RW
CHK. BY: LFS
DRAWING NO.: FL-47284.7
SHEET 2 OF 12

© 2025 R.W. Building Consultants Inc.

Z:\2023 FBC Drawings\Trinity Glass Int'l\FL-47284 R1\FL-47284.7.dwg

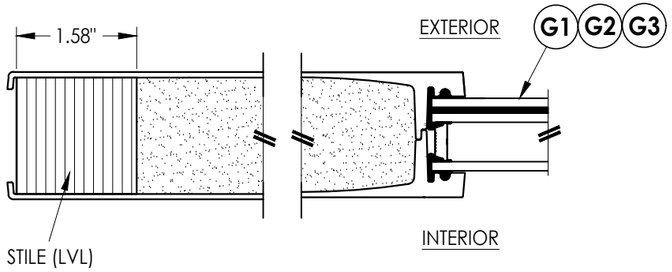

1/3 **HORIZONTAL CROSS SECTION**

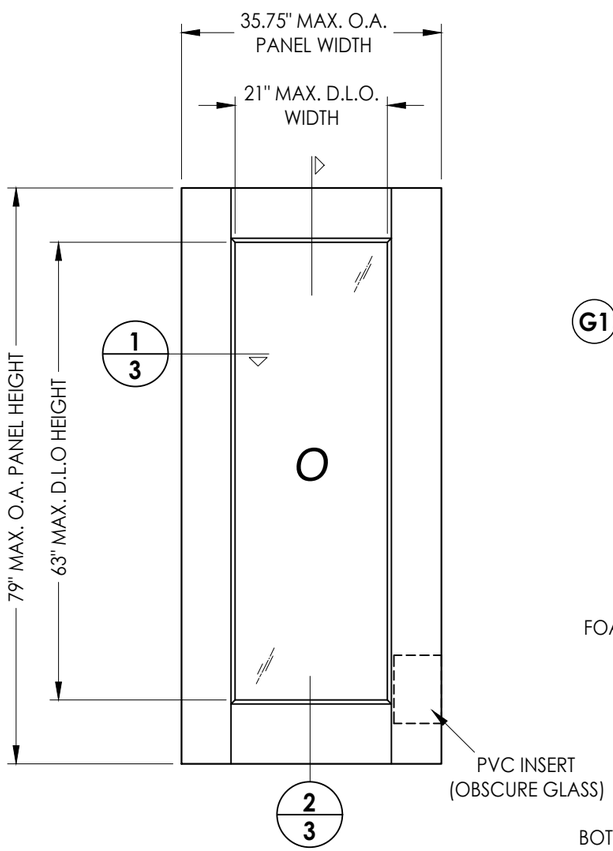

50 **FIBERGLASS SIDELITE PANEL**

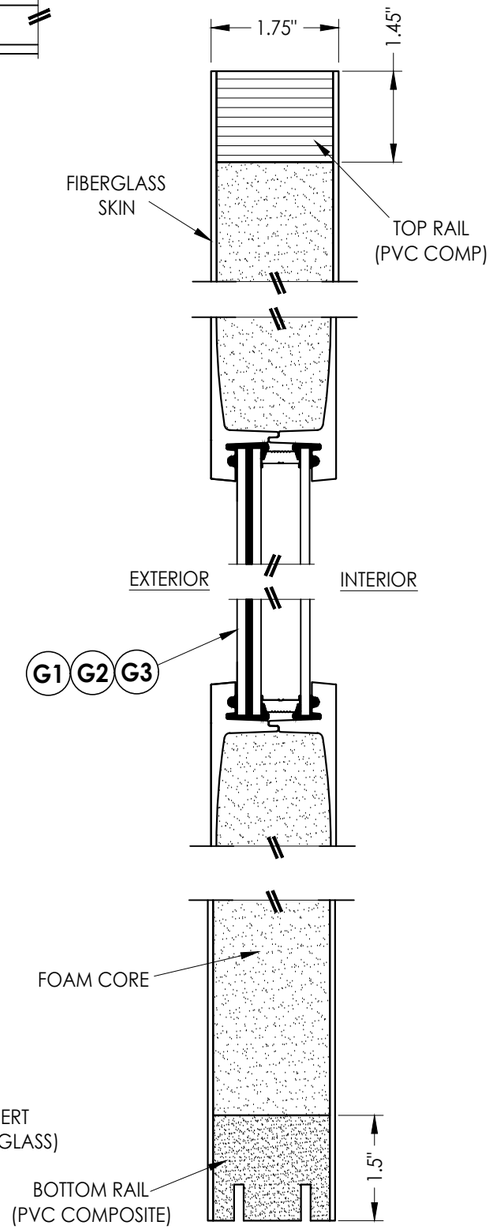

2/3 **VERTICAL CROSS SECTION**

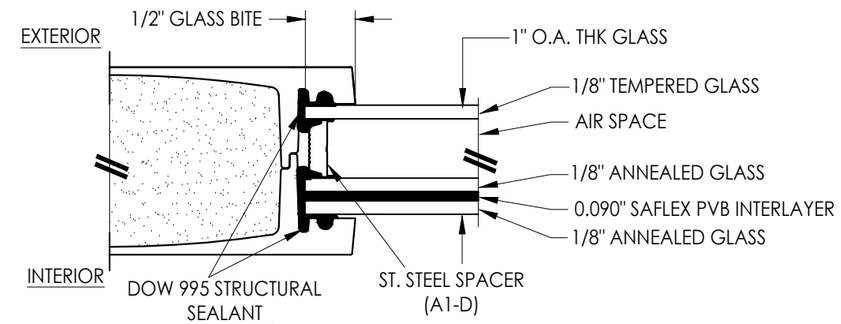

G1 **GLAZING DETAIL**
CLEAR GLASS

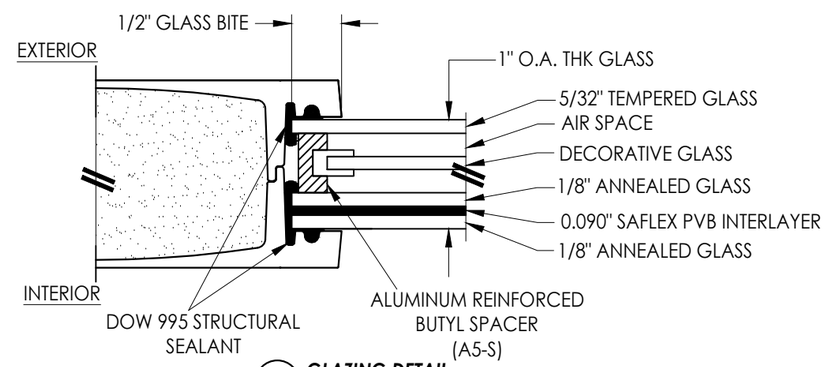

G2 **GLAZING DETAIL**
DECORATIVE GLASS

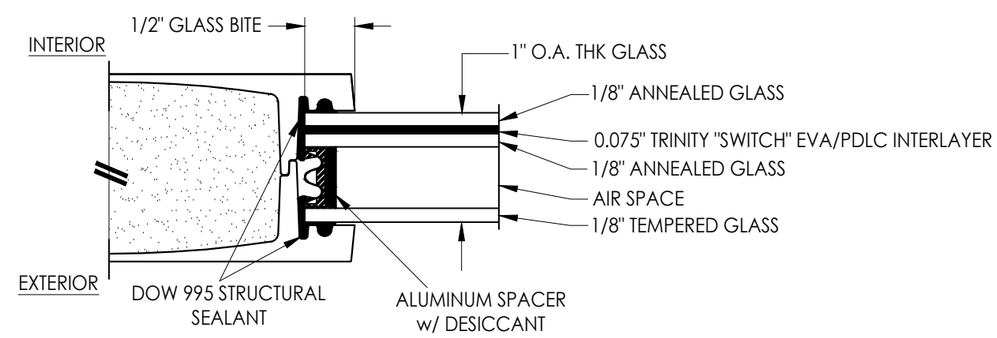

G3 **GLAZING DETAIL**
CLEAR OR OPAQUE PDLC GLASS

FIBERGLASS DOOR SKIN: MIN. 0.071" THK.
FOAM CORE MATERIAL: POLYURETHANE

Documents Prepared By:
Lyndon F. Schmidt
P.E. No. 43409

RW BUILDING CONSULTANTS, INC.
P.O. Box 230, Valrico, FL 33595
Phone No.: 813.659.9197
FBPE Registry No. 9813

PRODUCT: *TRINITY FIBERGLASS PATIO DOOR*

PART OR ASSEMBLY: *SIDELITE PANEL & FLUSH GLAZING DETAILS*

NO.	DATE	REVISIONS	BY
1	6/20/25	ADD GLAZING DETAIL G3	LFS

DATE: 1/30/25
SCALE: N.T.S.
DWG. BY: RW
CHK. BY: LFS
DRAWING NO.: FL-47284.7
SHEET 3 OF 12

© 2025 R.W. BUILDING CONSULTANTS INC.

Z:\2023 FBC Drawings\Trinity Glass Int'l\FL-47284 R1\FL-47284.7.dwg

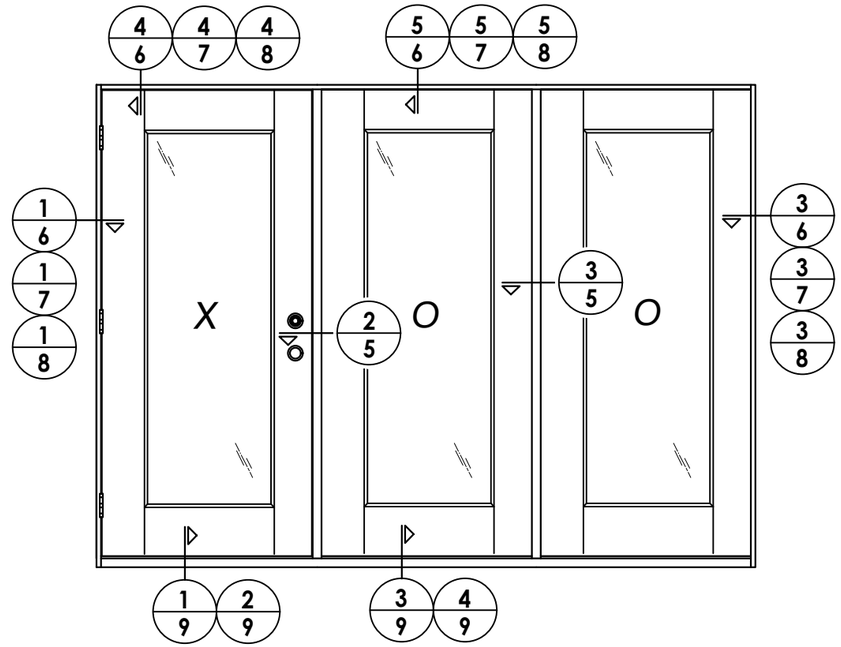

ELEVATION
XOO / OOX (SHOWN)
XO / OX (SIMILAR)

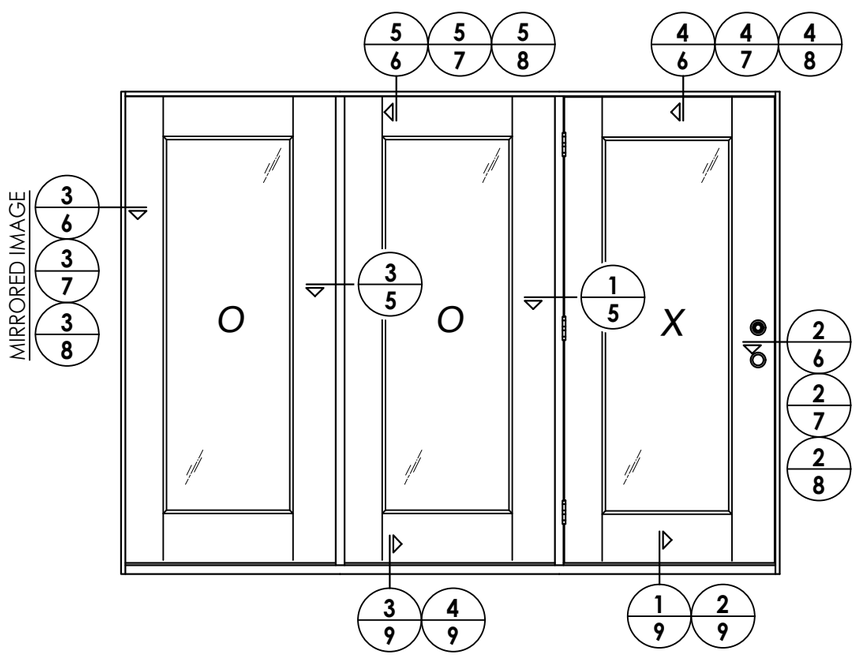

ELEVATION
OOX / XOO (SHOWN)
OX / XO (SIMILAR)
(CENTER HINGED)

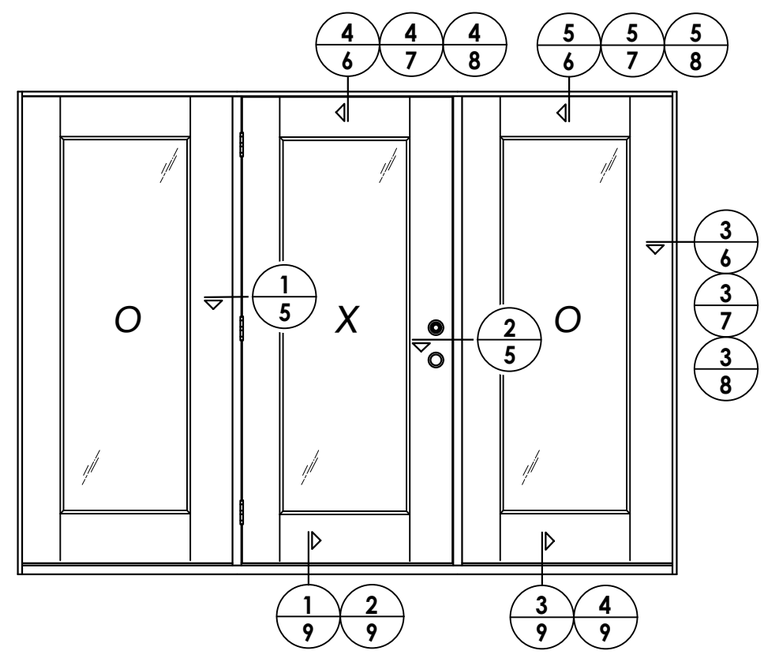

ELEVATION
OXO

Documents Prepared By:
Lyndon F. Schmidt
P.E. No. 43409

RW BUILDING CONSULTANTS, INC.
P.O. Box 230, Valrico, FL 33595
Phone No.: 813.659.9197
FBPE Registry No. 9813

PRODUCT: TRINITY FIBERGLASS PATIO DOOR

PART OR ASSEMBLY: ELEVATIONS

REVISIONS

NO.	DATE		BY
1	6/20/25	ADD GLAZING DETAIL G3	LFS

DATE: 1/30/25
SCALE: N.T.S.
DWG. BY: RW
CHK. BY: LFS
DRAWING NO.: FL-47284.7
SHEET 4 OF 12

© 2025 R.W. Building Consultants Inc.

Z:\2023 FBC Drawings\Trinity Glass Int'l\FL-47284 R1\FL-47284.7.dwg

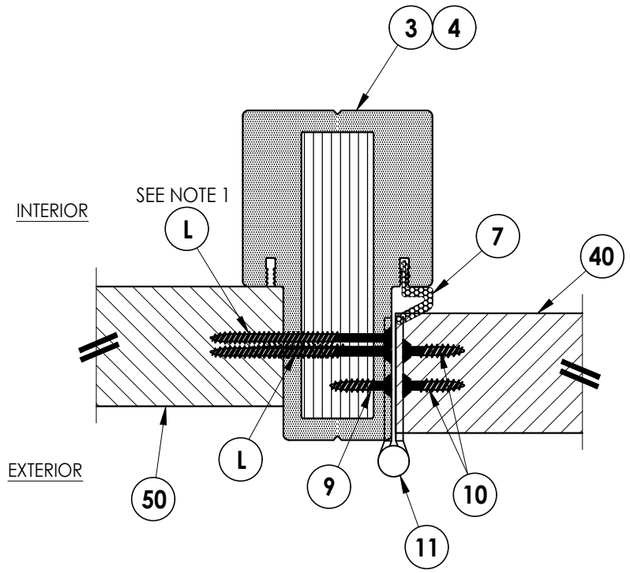

1/5 **HORIZONTAL CROSS SECTION**
Outswing Shown (Inswing Similar)

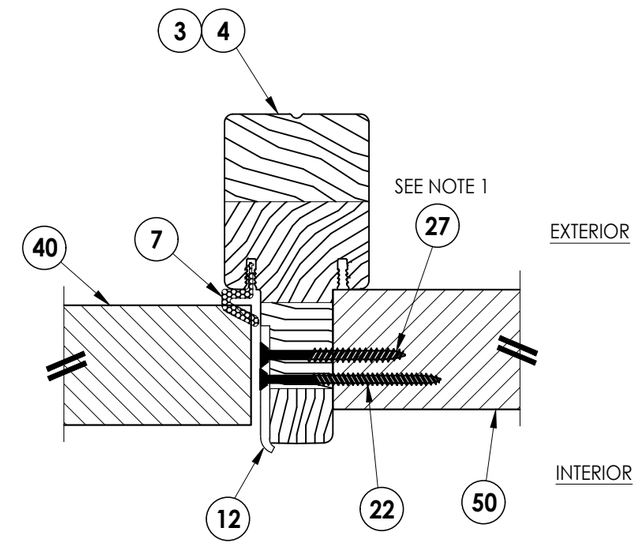

2/5 **HORIZONTAL CROSS SECTION**
Outswing Shown (Inswing Similar)

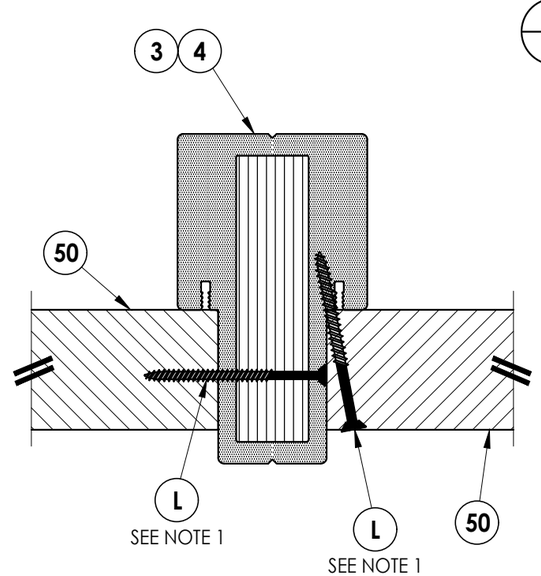

3/5 **HORIZONTAL CROSS SECTION**
Outswing Shown (Inswing Similar)

Note:
1. Sidelite assembly screws located 6" from each end and 4 more screws equally spaced between (6 screws total per side jamb).

Documents Prepared By:
Lyndon F. Schmidt
P.E. No. 43409

RW BUILDING CONSULTANTS, INC.
P.O. Box 230, Valrico, FL 33595
Phone No.: 813.659.9197
FBPE Registry No. 9813

PRODUCT: TRINITY FIBERGLASS PATIO DOOR

PART OR ASSEMBLY: HORIZONTAL CROSS SECTIONS

NO.	DATE		BY
1	6/20/25	ADD GLAZING DETAIL G3	LFS

REVISIONS

DATE: 1/30/25
SCALE: N.T.S.
DWG. BY: RW
CHK. BY: LFS
DRAWING NO.: FL-47284.7
SHEET 5 OF 12

© 2025 R.W. Building Consultants Inc.

Z:\2023 FBC Drawings\Trinity Glass Int'l\FL-47284 R1\FL-47284.7.dwg

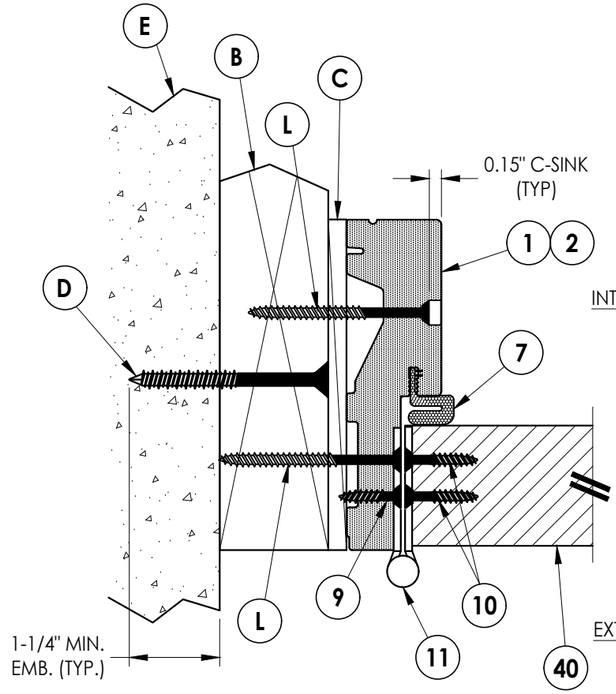

1/6 HORIZONTAL CROSS SECTION
Outswing Shown (Inswing Similar)
Shown w/ 2X Buck

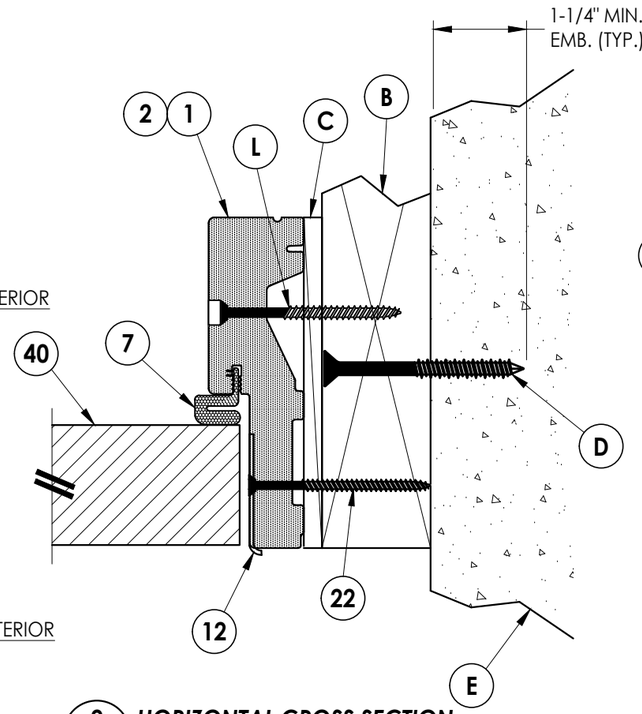

2/6 HORIZONTAL CROSS SECTION
Outswing Shown (Inswing Similar)
Shown w/ 2X Buck

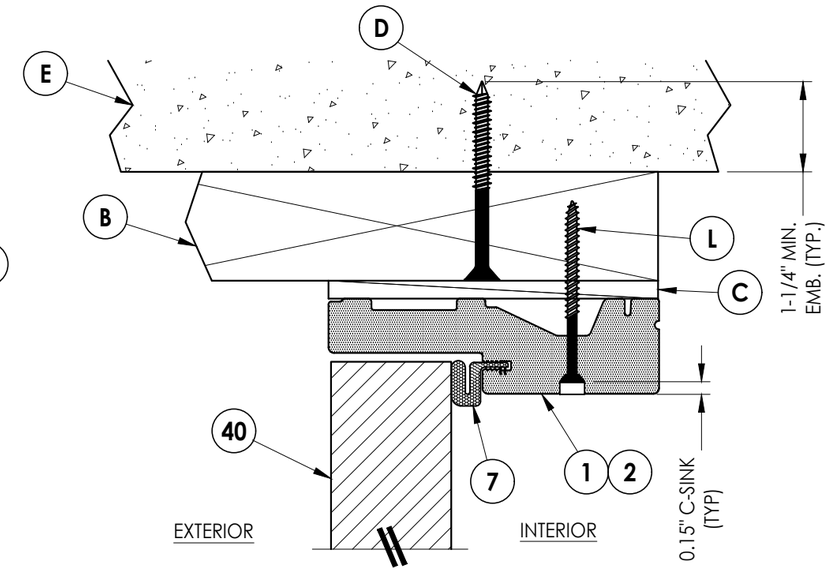

4/6 VERTICAL CROSS SECTION
Outswing Shown (Inswing Similar)
Shown w/ 2X Buck

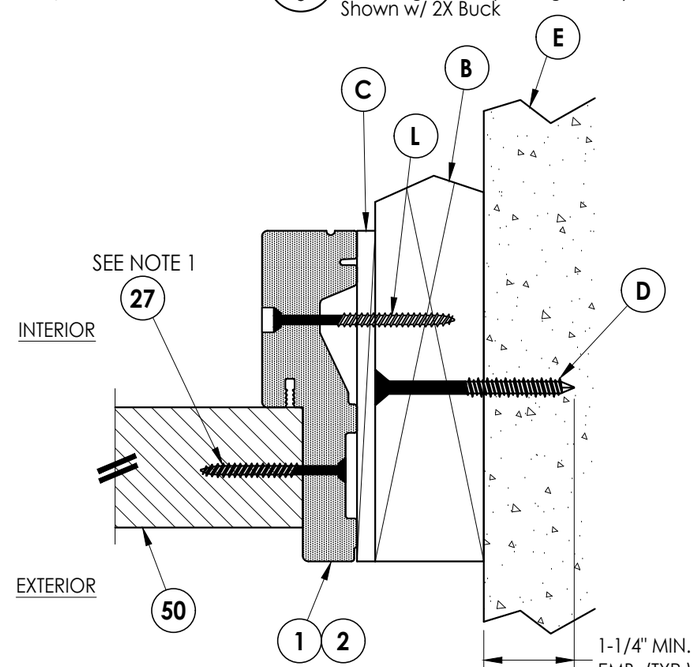

3/6 HORIZONTAL CROSS SECTION
Outswing Shown (Inswing Similar)
Shown w/ 2X Buck

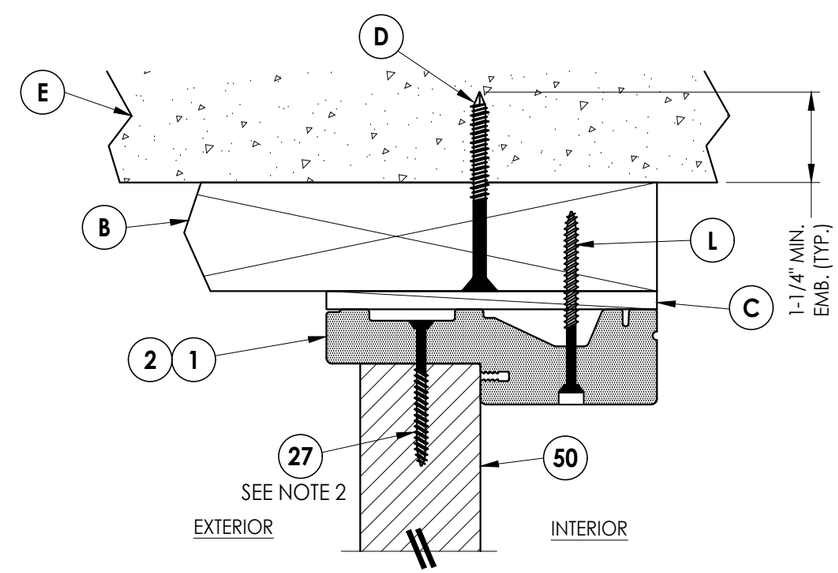

5/6 VERTICAL CROSS SECTION
Outswing Shown (Inswing Similar)
Shown w/ 2X Buck

Notes:
1. Sidelite assembly screws located 6" from each end and 4 more screws equally spaced between (6 screws total per side jamb).
2. Sidelite assembly screws located 10" from each end (2 screws total along head & sill).

Documents Prepared By:
Lyndon F. Schmidt
P.E. No. 43409
RW BUILDING CONSULTANTS, INC.
P.O. Box 230, Valrico, FL 33595
Phone No.: 813.659.9197
FBPE Registry No. 9813

PRODUCT: TRINITY FIBERGLASS PATIO DOOR

PART OR ASSEMBLY: HORIZONTAL & VERTICAL CROSS SECTIONS (2X BUCK)

NO.	DATE	REVISIONS	BY
1	6/20/25	ADD GLAZING DETAIL G3	LFS

DATE: 1/30/25
SCALE: N.T.S.
DWG. BY: RW
CHK. BY: LFS
DRAWING NO.: FL-47284.7
SHEET 6 OF 12

© 2025 R.W. Building Consultants Inc.

Z:\2023 FBC Drawings\Trinity Glass Int'l\FL-47284 R1\FL-47284.7.dwg

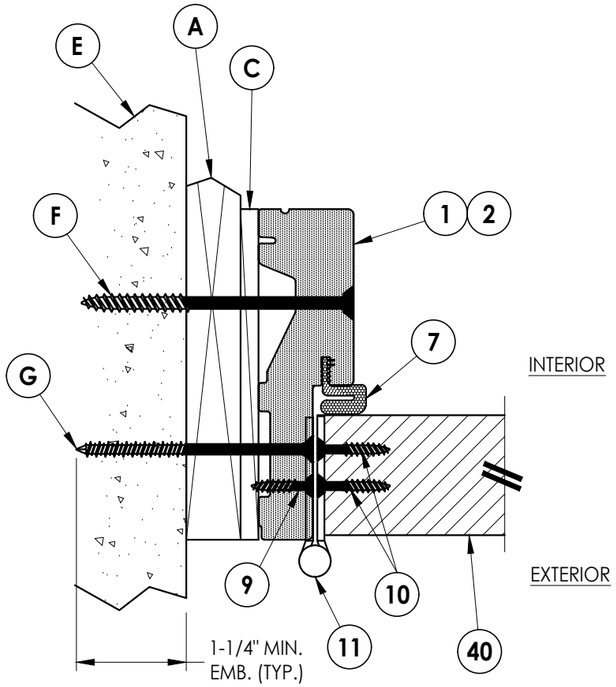

1/7 HORIZONTAL CROSS SECTION
Outswing Shown (Inswing Similar)
Shown w/ 1X Buck

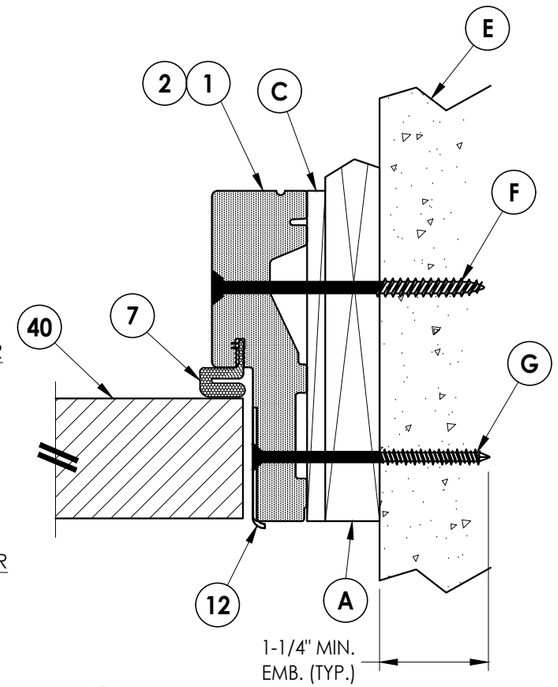

2/7 HORIZONTAL CROSS SECTION
Outswing Shown (Inswing Similar)
Shown w/ 1X Buck

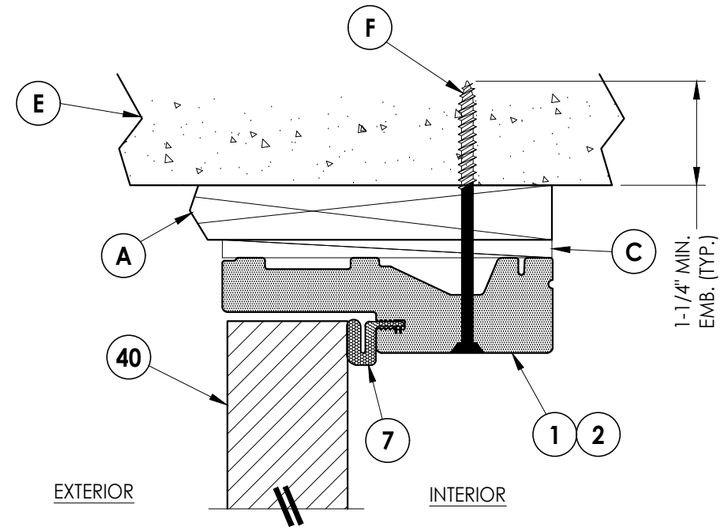

4/7 VERTICAL CROSS SECTION
Outswing Shown (Inswing Similar)
Shown w/ 1X Buck

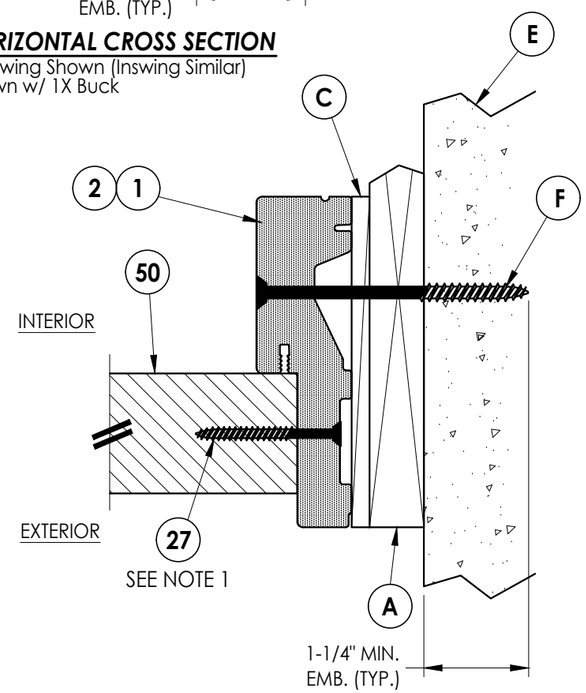

3/7 HORIZONTAL CROSS SECTION
Outswing Shown (Inswing Similar)
Shown w/ 1X Buck

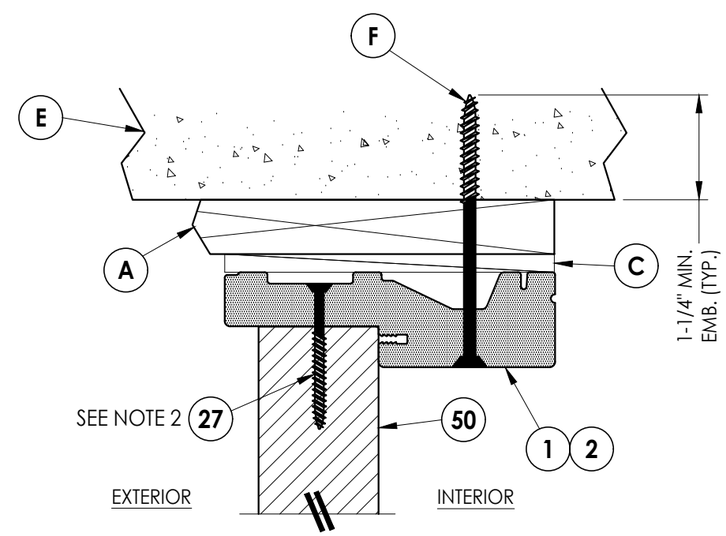

5/7 VERTICAL CROSS SECTION
Outswing Shown (Inswing Similar)
Shown w/ 1X Buck

Notes:
1. Sidelite assembly screws located 6" from each end and 4 more screws equally spaced between (6 screws total per side jamb).
2. Sidelite assembly screws located 10" from each end (2 screws total along head & sill).

Documents Prepared By:
Lyndon F. Schmidt
P.E. No. 43409

RW BUILDING CONSULTANTS, INC.
P.O. Box 230, Valrico, FL 33595
Phone No.: 813.659.9197
FBPE Registry No. 9813

PRODUCT: FIBERGLASS PATIO DOOR TRINITY

PART OR ASSEMBLY: HORIZONTAL & VERTICAL CROSS SECTIONS (1X BUCK)

REVISIONS

NO.	DATE	BY
1	6/20/25	LFS
	ADD GLAZING DETAIL G3	

DATE: 1/30/25
SCALE: N.T.S.
DWG. BY: RW
CHK. BY: LFS
DRAWING NO.: FL-47284.7
SHEET 7 OF 12

© 2025 R.W. Building Consultants Inc.

Z:\2023 FBC Drawings\Trinity Glass Int'l\FL-47284 R1\FL-47284.7.dwg

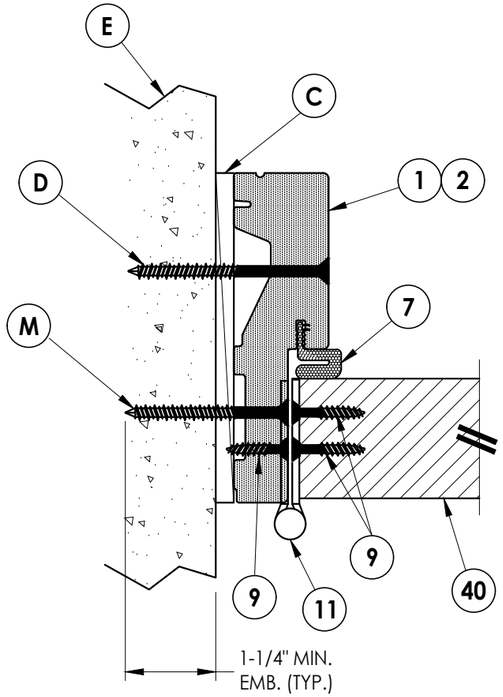

1/8 HORIZONTAL CROSS SECTION
Outswing Shown (Inswing Similar)
Shown Direct to Masonry

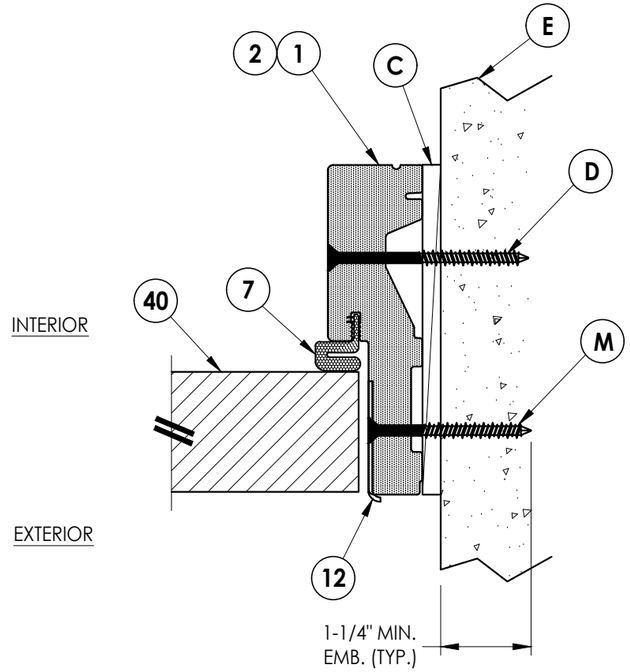

2/8 HORIZONTAL CROSS SECTION
Outswing Shown (Inswing Similar)
Shown Direct to Masonry

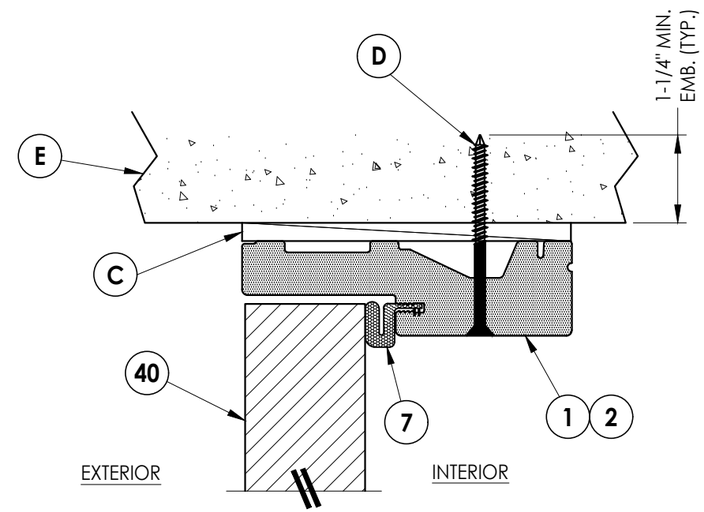

4/8 VERTICAL CROSS SECTION
Outswing Shown (Inswing Similar)
Shown Direct to Masonry

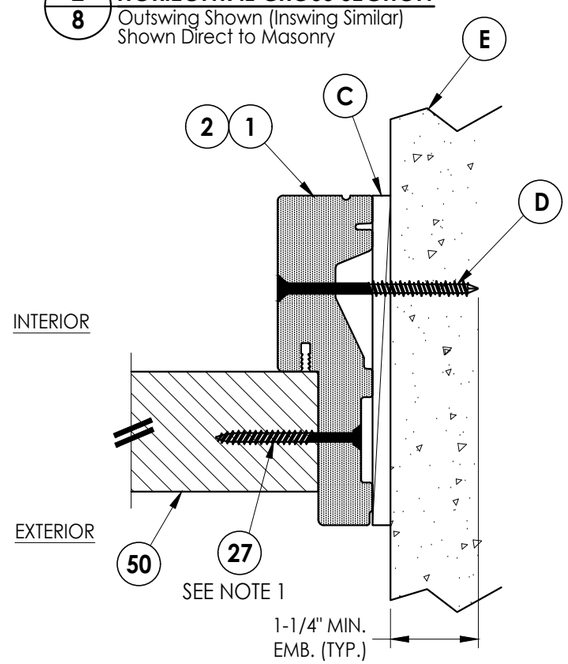

3/8 HORIZONTAL CROSS SECTION
Outswing Shown (Inswing Similar)
Shown Direct to Masonry

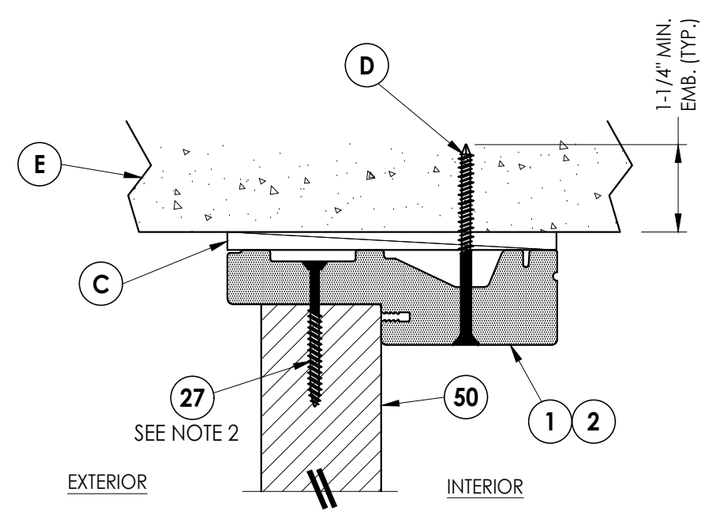

5/8 VERTICAL CROSS SECTION
Outswing Shown (Inswing Similar)
Shown Direct to Masonry

Notes:
1. Sidelite assembly screws located 6" from each end and 4 more screws equally spaced between (6 screws total per side jamb).
2. Sidelite assembly screws located 10" from each end (2 screws total along head & sill).

Documents Prepared By:
Lyndon F. Schmidt
P.E. No. 43409
RW BUILDING CONSULTANTS, INC.
P.O. Box 230, Valrico, FL 33595
Phone No.: 813.659.9197
FBPE Registry No. 9813

PRODUCT: TRINITY FIBERGLASS PATIO DOOR

PART OR ASSEMBLY: HORIZONTAL & VERTICAL CROSS SECTIONS (DIRECT TO MASONRY)

NO.	DATE	REVISIONS	BY
1	6/20/25	ADD GLAZING DETAIL G3	LFS

DATE: 1/30/25
SCALE: N.T.S.
DWG. BY: RW
CHK. BY: LFS
DRAWING NO.: FL-47284.7
SHEET 8 OF 12

© 2025 R.W. Building Consultants Inc.

Z:\2023 FBC Drawings\Trinity Glass Int'l\FL-47284 R1\FL-47284.7.dwg

Note:
1. Sidelite assembly screws located 10" from each end (2 screws total along head & sill).

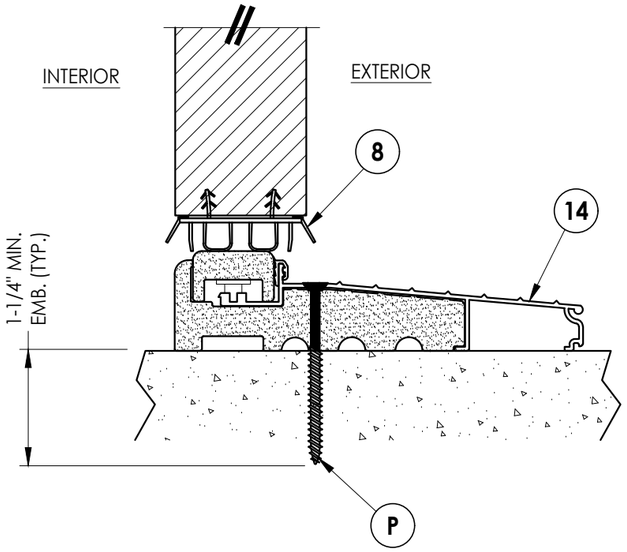

1/9 **VERTICAL CROSS SECTION**
Inswing Sill

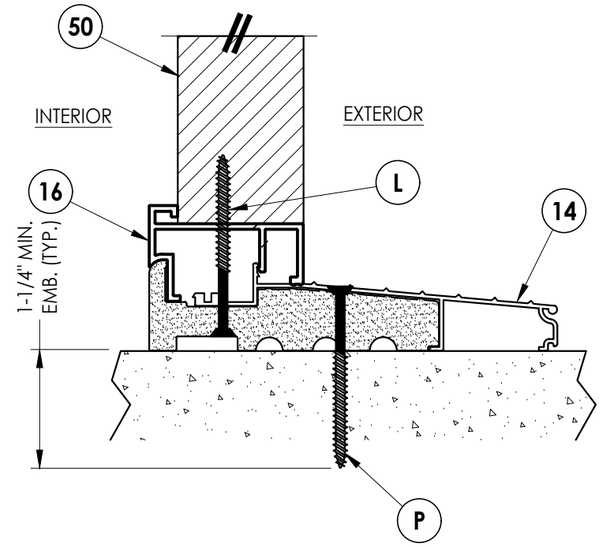

3/9 **VERTICAL CROSS SECTION**
Inswing Sill

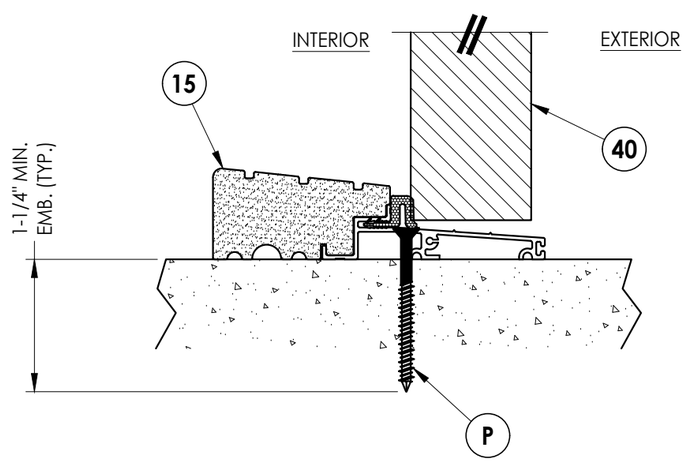

2/9 **VERTICAL CROSS SECTION**
Outswing Sill

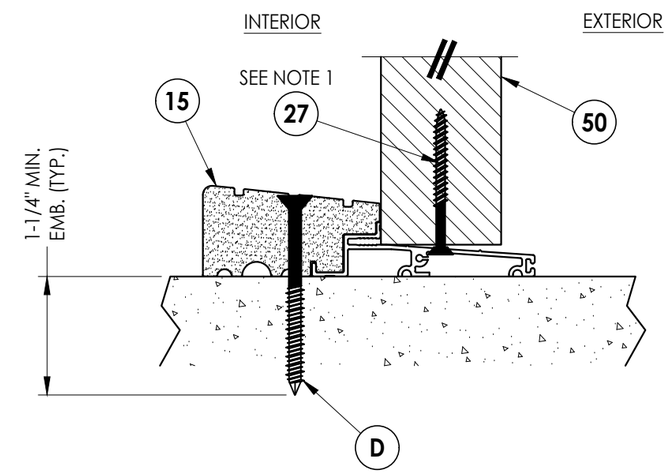

4/9 **VERTICAL CROSS SECTION**
Outswing Sill

Documents Prepared By:
Lyndon F. Schmidt
P.E. No. 43409
RW BUILDING CONSULTANTS, INC.
P.O. Box 230, Valrico, FL 33595
Phone No.: 813.659.9197
FBPE Registry No. 9813

PRODUCT: *TRINITY FIBERGLASS PATIO DOOR*

PART OR ASSEMBLY: *VERTICAL CROSS SECTIONS (THRESHOLDS)*

NO.	DATE	REVISIONS	BY
1	6/20/25	ADD GLAZING DETAIL G3	LFS

DATE: 1/30/25
SCALE: N.T.S.
DWG. BY: RW
CHK. BY: LFS
DRAWING NO.: FL-47284.7
SHEET 9 OF 12

© 2025 R.W. Building Consultants Inc.

Z:\2023 FBC Drawings\Trinity Glass Int'l\FL-47284 R1\FL-47284.7.dwg

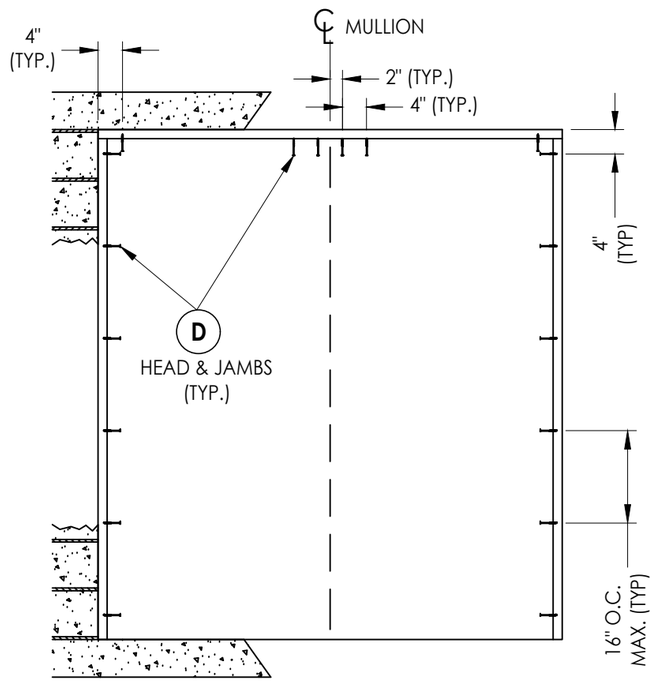

XO, OX

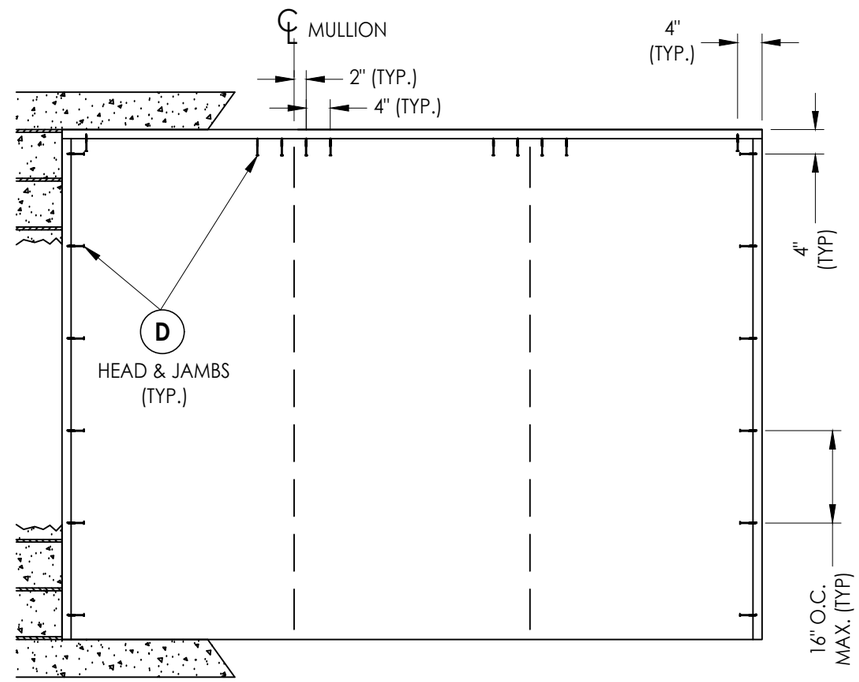

OXO, OOX, XOO

2X BUCK ANCHORING

Documents Prepared By:
Lyndon F. Schmidt
P.E. No. 43409
RW BUILDING CONSULTANTS, INC.
P.O. Box 230, Valrico, FL 33595
Phone No.: 813.659.9197
FBPE Registry No. 9813

PRODUCT: TRINITY FIBERGLASS PATIO DOOR

PART OR ASSEMBLY: BUCK ANCHORING

NO.	DATE	REVISIONS	BY
1	6/20/25	ADD GLAZING DETAIL G3	LFS

DATE: 1/30/25
SCALE: N.T.S.
DWG. BY: RW
CHK. BY: LFS
DRAWING NO.: FL-47284.7
SHEET 10 OF 12

© 2025 R.W. Building Consultants Inc.

Z:\2023 FBC Drawings\Trinity Glass Int'l\FL-47284 R1\FL-47284.7.dwg

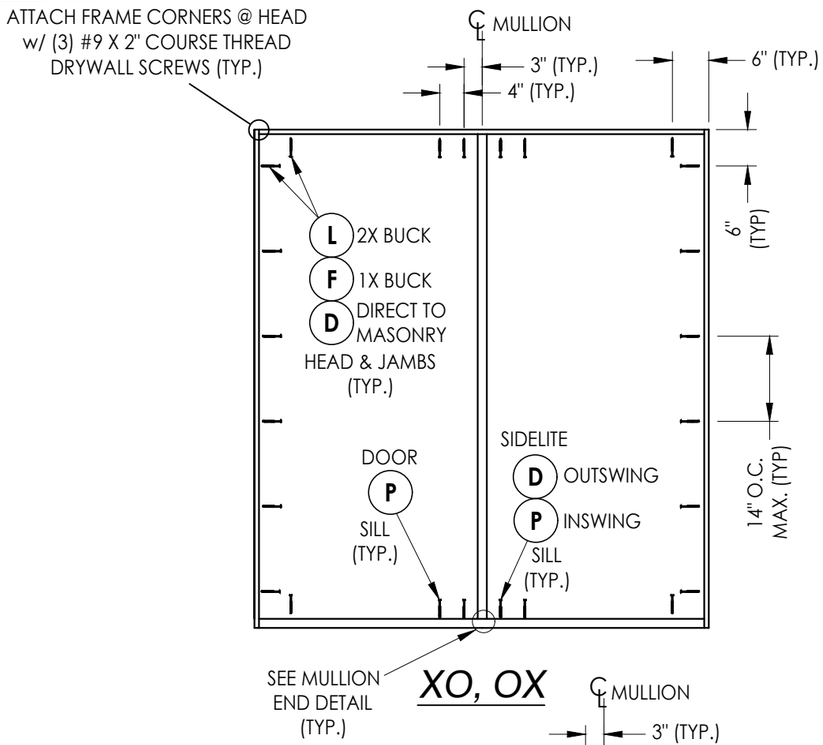

XO, OX

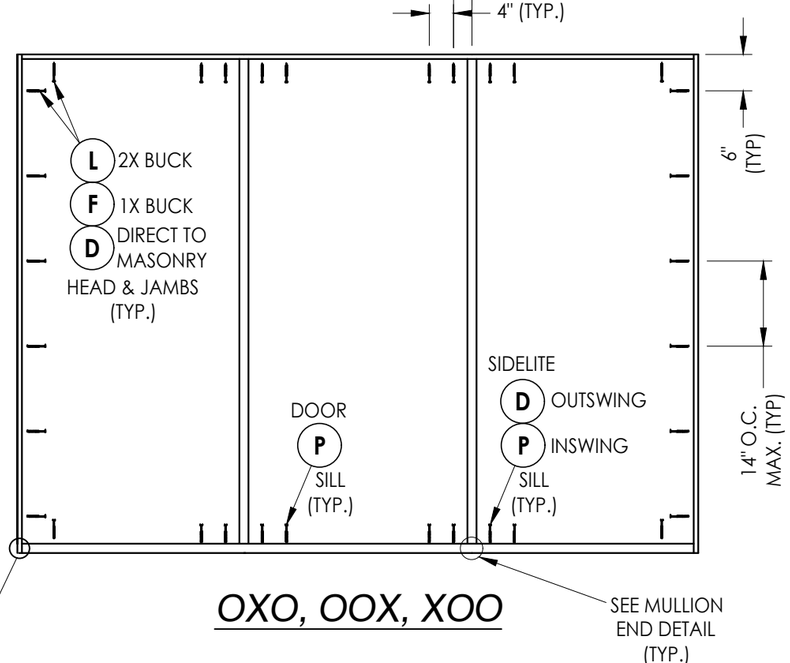

OXO, OOX, XOO

FRAME ANCHORING

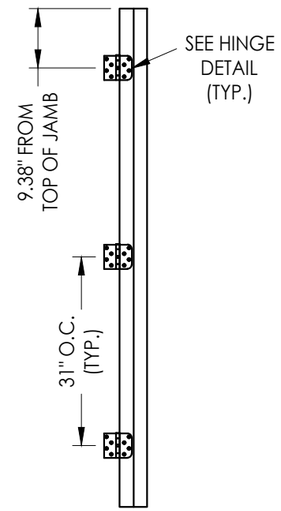

HINGE JAMB

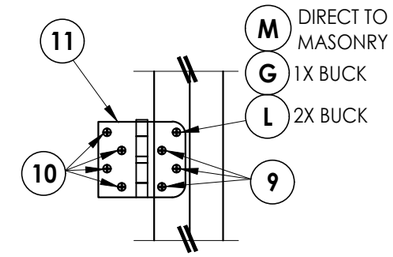

HINGE DETAIL

INSWING

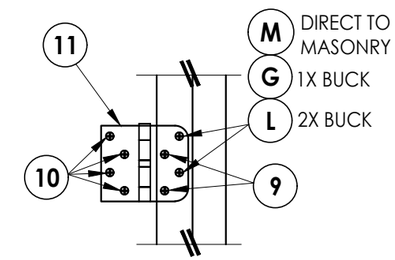

HINGE DETAIL

OUTSWING

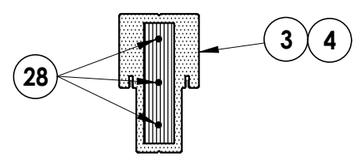

MULLION END DETAIL

@ HEAD & SILL

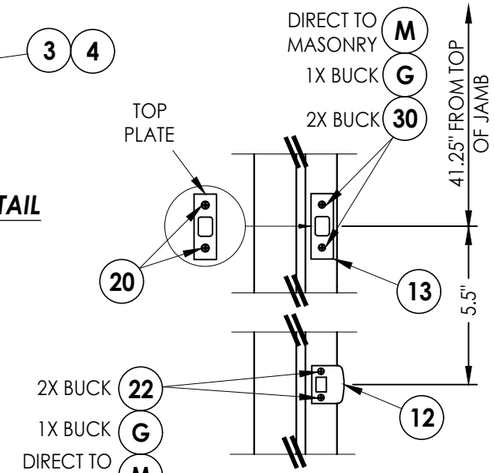

STRIKE PLATE DETAIL

SCHLAGE LOCKSET

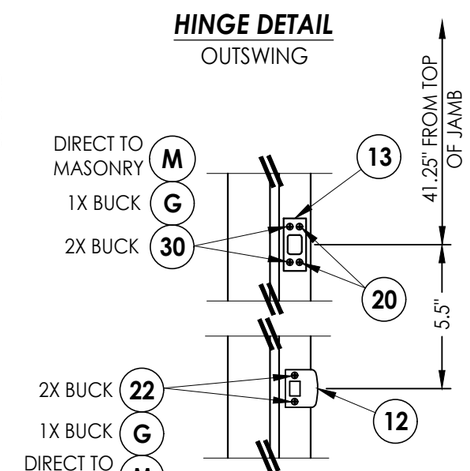

STRIKE PLATE DETAIL

KWIKSET LOCKSET

HARDWARE DETAILS

Documents Prepared By:
Lyndon F. Schmidt
P.E. No. 43409
RW BUILDING CONSULTANTS, INC.
P.O. Box 230, Valrico, FL 33595
Phone No.: 813.659.9197
FBPE Registry No. 9813

PRODUCT: TRINITY FIBERGLASS PATIO DOOR

PART OR ASSEMBLY: FRAME ANCHORING & HARDWARE DETAILS

NO.	DATE	REVISIONS	BY
1	6/20/25	ADD GLAZING DETAIL G3	LFS

DATE: 1/30/25
SCALE: N.T.S.
DWG. BY: RW
CHK. BY: LFS
DRAWING NO.: FL-47284.7
SHEET 11 OF 12

© 2025 R.W. Building Consultants Inc.

Z:\2023 FBC Drawings\Trinity Glass Int'l\FL-47284 R1\FL-47284.7.dwg

BILL OF MATERIALS

ITEM #	DESCRIPTION	MATERIAL
A	1X BUCK (G >= 0.42)	WOOD
B	2X BUCK (G >= 0.42)	WOOD
C	1/4" MAX. SHIM SPACE	-
D	1/4" X 2-3/4" PFH DeWALT OR ITW CONCRETE SCREW	STEEL
E	MASONRY - 3,000 PSI MIN. CONCRETE CONFORMING TO ACI 301 OR HOLLOW BLOCK CONFORMING TO ASTM C90	CONCRETE
F	1/4" X 3-3/4" PFH DeWALT OR ITW CONCRETE SCREW	STEEL
G	3/16" X 3-1/4" PFH ITW CONCRETE SCREW	STEEL
L	#10 X 2-1/2" PFH WOOD SCREW (1.15" MIN. EMB.)	STEEL
M	3/16" X 2-1/4" PFH ITW CONCRETE SCREW	STEEL
P	1/4" X 2-1/4" PFH DeWALT OR ITW CONCRETE SCREW	STEEL
1	PVC JAMB	PVC
2	WOOD JAMB	WOOD
3	PVC MULLION (w/ LVL INSERT)	PVC/LVL
4	WOOD MULLION	WOOD
7	WEATHERSTRIP	FOAM
8	DOOR SWEEP	VINYL
9	#9 X 3/4" PFH WOOD SCREW	STEEL
10	#9 X 1" PFH WOOD SCREW	STEEL
11	4" X 4" HINGE	STEEL
12	LATCH STRIKE PLATE	STEEL
13	DEADBOLT STRIKE PLATE	STEEL
14	INSWING THRESHOLD	ALUM/COMP
15	OUTSWING THRESHOLD	ALUM/COMP
16	INSWING SIDELITE ADAPTER	PVC
20	#8 X 1/2" PFH WOOD SCREW	STEEL
22	#8 X 2-1/2" PFH WOOD SCREW	STEEL
27	#10 X 2" PFH SMS	STEEL
28	#10 X 3" PFH WOOD SCREW	STEEL
30	#12 X 2-1/2" PFH WOOD SCREW	STEEL
40	DOOR PANEL	-
50	SIDELITE PANEL	-

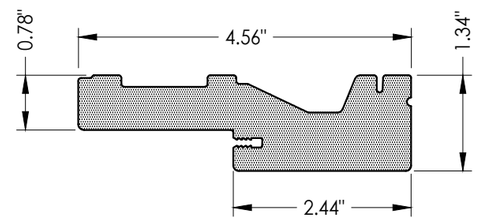

1 **PVC JAMB**

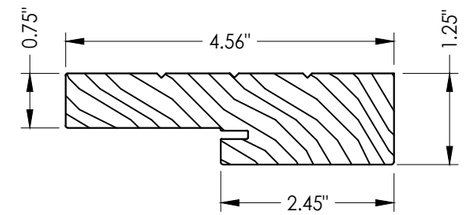

2 **WOOD JAMB**
FINGER JOINTED PINE

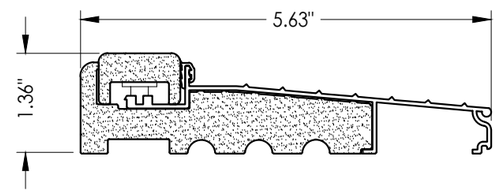

14 **INSWING THRESHOLD**

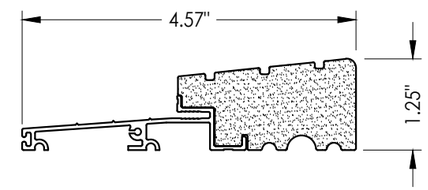

15 **OUTSWING THRESHOLD**

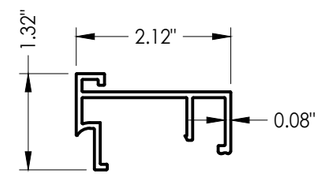

16 **INSWING SIDELITE ADAPTER**

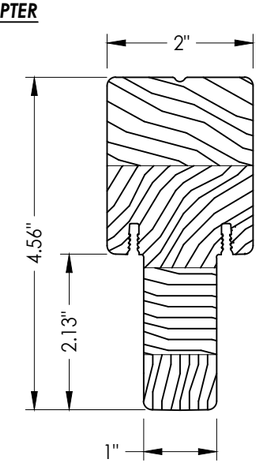

4 **INTEGRAL MULLION**
PINE

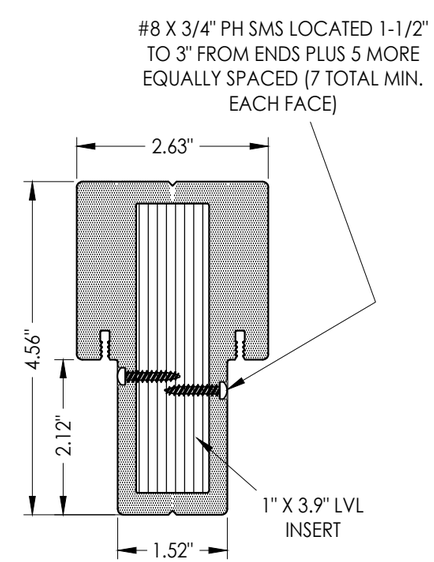

3 **PVC MULLION**

CONCRETE ANCHOR NOTES:

1. *Concrete anchor locations at the corners may be adjusted to maintain the min. edge distance to mortar joints.*
2. *Concrete anchor locations noted as "MAX. ON CENTER" must be adjusted to maintain the min. edge distance to mortar joints, additional concrete anchors may be required to ensure the "MAX. ON CENTER" dimension are not exceeded.*
3. *Concrete anchor table:*

ANCHOR TYPE	ANCHOR SIZE	MIN. EMBEDMENT	MIN. CLEARANCE TO MASONRY EDGE	MIN. CLEARANCE TO ADJACENT ANCHOR
ITW BUILDEX TAPCON®	3/16"	1-1/4"	3"	1-1/2"
	1/4"	1-1/4"	2"	4"
DeWALT ULTRACON+®	1/4"	1-1/4"	1"	4"

WOOD SCREW INSTALLATION NOTES:

1. *Maintain a minimum 5/8" edge distance, 1" end distance, & 1" o.c. spacing of wood screws to prevent the splitting of wood.*

Documents Prepared By:
Lyndon F. Schmidt
P.E. No. 43409
RW BUILDING CONSULTANTS, INC.
P.O. Box 230, Valrico, FL 33595
Phone No.: 813.659.9197
FBPE Registry No. 9813

PRODUCT: *TRINITY FIBERGLASS PATIO DOOR*

PART OR ASSEMBLY: *BILL OF MATERIALS & COMPONENTS*

NO.	DATE	REVISIONS	BY
1	6/20/25	ADD GLAZING DETAIL G3	LFS

DATE: 1/30/25
SCALE: N.T.S.
DWG. BY: RW
CHK. BY: LFS
DRAWING NO.: FL-47284.7
SHEET 12 OF 12

© 2025 R.W. Building Consultants Inc.

Z:\2023 FBC Drawings\Trinity Glass Int'l\FL-47284 R1\FL-47284.7.dwg